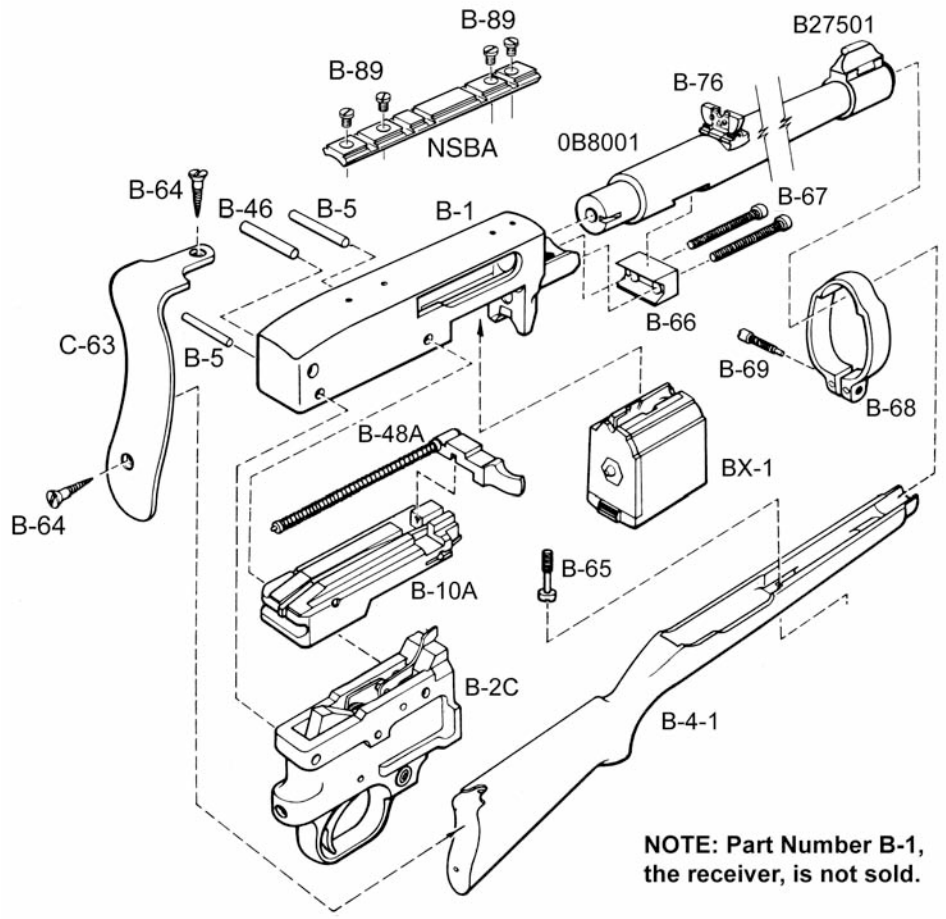RUGER® MODEL 10/22® CARBINE